SINGLE RJ45 CONNECTOR MODULE WITH INTEGRATED 1000 BASE-T MAGNETICS

FEATURES

- 1000 Base-T RJ45 1x1 Tab-DOWN with integrated magnetics connector
- Available with or without LEDs
- Suitable for CAT 5 & 6 Fast Ethernet Cable or better UTP
- 350 µH minimum OCL with 8 mA bias current
- Minimum 1500 Vrms isolation per IEEE 802.3 requirement

Electrical Specifications @ 25°C — Operating Temperature 0°C to +70°C

Part Number	LEDs L/R	Insertion Loss TX/RX (dB)	Return Loss (dB TYP) 100 Ω (±15 Ω)			Crosstalk (dB TYP)			Common Mode Rejection (dB TYP)		Hipot (MIN)
		1-100MHz	1-10MHz	30MHz	60-80MHz	1-10MHz	32-65MHz	65-100MHz	1-125MHz	125-500MHz	@60 Hz 1MIN
ST-JK005	NA	-1.0	-20	-16	-12	-40	-35	-30	-30	-20	1500 Vrms
ST-JK006	G/Y	-1.0	-20	-16	-12	-40	-35	-30	-30	-20	1500 Vrms
ST-JK007	N/A	-1.0	-20	-16	-12	-40	-35	-30	-30	-20	1500 Vrms
ST-JK008	G/Y	-1.0	-20	-16	-12	-40	-35	-30	-30	-20	1500 Vrms

Mechanicals

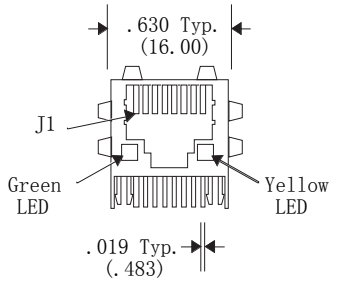

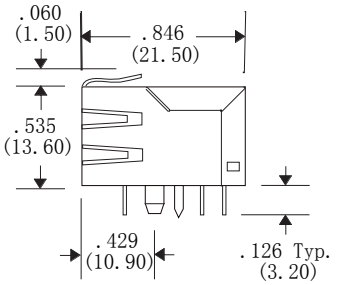

Dimensions: Inches / mm

Unless otherwise specified,

all tolerances are ± .010 / 0,25

Schematics

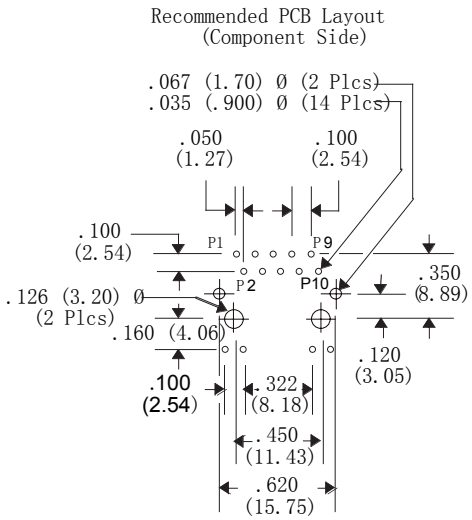

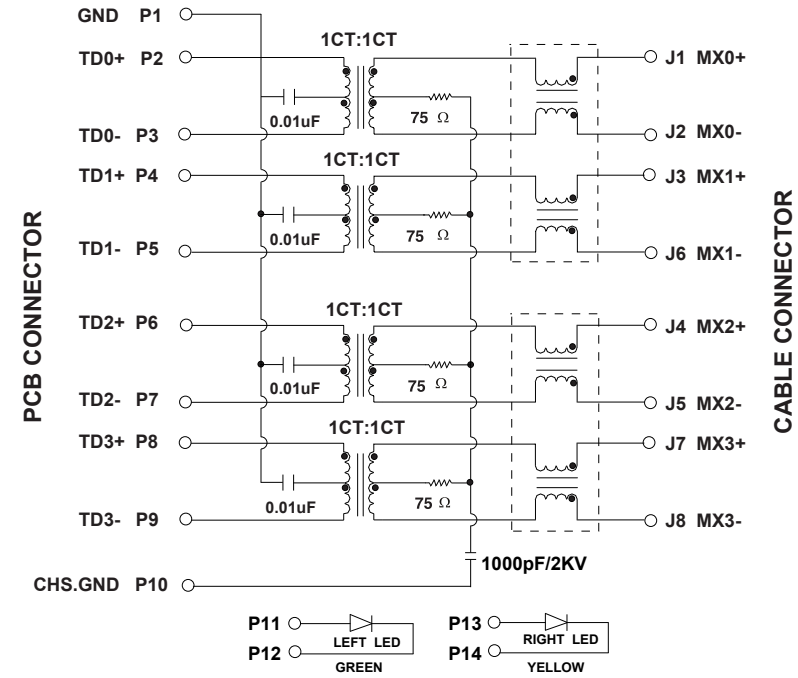

NOTE: ST-JK005, ST-JK006 does not have the additional choke.